MAULE AEROSPACE TECHNOLOGY, INC.

Maintenance Manual

FOR

MAULE M-7-235C

Super Rocket

P/N: ***TLC-M-7-235C***
Rev. D Dated 6-5-19
PC: *SMM*

PERFORMANCE THAT COUNTS!
2099 Georgia Hwy 133 South ~ Moultrie, GA 31788
Tel: 229-985-2045 ~ Fax: 229-890-2402/985-2048
www.mauleairinc.com

FORWARD

Ahead of you are many hours of flying pleasure. The more you fly your M-7 the more you will realize that flying this aircraft is a stimulating new sensation that will never grow old.

The Maule M-7 was designed and built to give you the airplane you have always wanted. It is fast, comfortable, and easy to fly, yet no light airplane is safer than the Maule M-7. Its sturdy construction means you will not have to pamper it to enjoy long years of trouble-free service.

Our dealers and distributors are anxious to serve you and will gladly furnish advice as to proper servicing methods. You may also address requests for information on any items not covered in this manual to Maule Parts/Service Department of Maule Air, Inc. (Telephone 229-985-2045, Ext. 239). In correspondence, please be certain to give complete information on serial number, engine make and model, etc.

We have gone electronic. Any notification affecting your airplane and/or manuals of a change, optional, mandatory or an optional upgrade will be emailed to you and item(s) will be available to download off our website at www.mauleairinc.com. If you have not already done so, please **Send Your Email Address,** aircraft model designation and serial number to owneralert@mauleairinc.com.

WARRANTY

Maule Air, Inc. warrants each new airplane manufactured by it to be free from defects in material and workmanship under normal use and service, provided, however, that this warranty is limited to making good at the Maule factory any part or parts thereof which shall, within one (1) year after delivery of such airplane to the original purchaser, be returned to Maule with transportation charges prepaid, and which upon Maule's examination shall disclose to its satisfaction to have been thus defective; this warranty being expressly in lieu of all other warranties expressed or implied and all other obligations or liabilities on the part of Maule, and Maule neither assumes nor authorizes any other person to assume for it any other liability in connection with the sale of its airplane.

This warranty shall not apply to any airplane which shall have been repaired or altered outside Maule's factory in any way so as, in Maule's judgment, to affect the airplane's stability or reliability, or which airplane has been subject to misuse, negligence or accident.

Certain items of equipment are warranted separately by their manufacturer. The Lycoming Engine and accessories are warranted by Textron Lycoming, Williamsport, PA. The Hartzell Propeller is warranted by Hartzell Propeller, Inc., Piqua, OH, the McCauley Propeller is warranted by McCauley Propeller, Inc., Dayton, OH. Avionics items are warranted by their manufacturers. Manufacturers of separately warranted item of equipment request that warranty claims be made through your nearest authorized Distributor or authorized Service Center. Maule Air will be glad to help you find that facility nearest to you.

TABLE OF CONTENTS

ITEM PAGE

Cover…… 1
Foreword..... 2
Warranty..... 2
Table of Contents…..... 3
Log of Revisions…..... 4

SECTION I - ***GENERAL DATA***

General Description..... 5
Design Specification..... 5
Fluid Capacities and Specification..... 6

SECTION II - ***GENERAL MAINTENANCE***

Cleaning and Care of Aircraft..... 7
Inspection Guides..... 9
Periodic Maintenance for ME406/406HM ELT…….. 13
Weighing Procedure…….. 15
Rigging Procedures..... 17
Lubrication..... 19
Fabric Repairs…… 20

SECTION III - ***MAJOR COMPONENT PARTS***

Wings..... 21
Lift Struts..... 21
Fuselage..... 21
Movable Surfaces and Controls..... 22
Landing Gear, Wheels and Brakes..... 23
Hoisting Wheel Views…… 24
Parking Brake Control Adjustment…….. 25
Maule SFS P8 Tailwheel…….. 27
Power Plant System..... 30
Fuel System..... 31
Electrical System..... 32
Electrical Schematic…14V…(s/n 25001C-25044C)……. 34
Electrical Schematic…14V…(s/n 25045C & Up)…… 35
Electrical Schematic…28V…….. 36
Door Latch (old style) Adjustment Procedure..... 37
Airworthiness Limitations Section…… 38

LOG OF REVISIONS

Rev.	To page(s)	Description	Date
A	iii 3, 4 9	Added Log of revision page iii. Added special maintenance procedures for floatplanes based in coastal areas or an otherwise corrosive atmosphere. Revised the inspection procedure concerning the horizontal stabilizer strut lower attach stub tubes.	07/19/99
B	26 26a	Added applicable Serial Numbers 25001C-25044C to Electrical Schematic on page 26. Added Electrical Schematic for Serial Numbers 25045C & up.	09/20/00
C	12 13	Added caution note when reconnecting elevator cables. Added visual inspection of color-coding paint for elevator horns and cables. Added Periodic Maintenance for ME406/406HM ELT.	08/08/08
D	12	Added statement for Service Letter #74. Differentiated between old AN and new NAS bolts. Removed NOTE for Service Letter #66.	06/05/19

SECTION I

GENERAL DATA

GENERAL DESCRIPTION:

Type: Five place high wing cabin monoplane.

Engine Installation: Single tractor engine in nose of fuselage.

Wing: Strut braced, two spar, metal covered, modified USA 35-B airfoil. Fiberglass wing tips.

Fuselage: Welded steel tube structure.

Fuselage and tail group covered with Ceconite synthetic fabric. Fiberglass engine cowl. Aluminum skin on forward fuselage and doors.

Landing Gear: Spring aluminum main gear. Hydraulic Brakes. Steerable tailwheel (Automatic locking)

Control Systems: Dual controls wheels, rudder pedals and brakes. All controls directly cable driven. Fuel control/shut off valve is at the left lower side panel. Mechanical flap and trim controls are at the center on the floor. All other controls, switches, etc., are instrument panel mounted.

DESIGN SPECIFICATIONS:

Wing Span	32 feet 11 inches
Length	23 feet 7½ inches
Height	6 feet 4 inches over wing
Gross Weight	2500 lbs.
Empty Weight	Approx. 1535 lbs.
Wing Loading	15.1 lbs./sq.ft.
Power Loading	10.6 lbs./HP
Useful Load	Approx. 965 lbs.
Seats	Five
Flaps	Neg. 7°, 0°, 24°, 40°, 48°
Baggage Allowance	250 lb. Structural Limit
Baggage Compartment Dimensions	38H x 32W x 27L (Approx.)

DESIGN SPECIFICATIONS: (Cont'd)

Wings:

a.	Airfoil	Modified USA 35-B
b.	Chord	63 inches
c.	Incidence	+30 minutes
d.	Dihedral	1.2 degrees
e.	Sweepback	None

Areas:

a.	Wing, Aileron and Flaps	165.6 sq.ft.
b.	Ailerons (total)	14.2 sq.ft.
c.	Flaps (total)	23.9 sq. ft.
d.	Horizontal Stabilizer	18.2 sq. ft.
e.	Elevators (including tab)	14.1 sq. ft.
f.	Vertical Stabilizer	13.1 sq. ft.
g.	Rudder	6.2 sq. ft.
h.	Elevator Trim tab	1.03 sq. ft.
i.	Rudder Tab	.34 sq. ft.

FLUID CAPACITIES AND SPECIFICATIONS:

a. Main Fuel Tanks - Inboard - 100 Octane

Right Main Tank	21.5 or 23.8 gallons total
Left Main Tank	21.5 or 23.8 gallons total

Note: 1.5 gallons unusable fuel per 21.5 gallon main tank
2.3 gallons unusable fuel per 23.8 gallon main tank

b. Auxiliary Fuel Tanks - Outboard - 100 Octane

Right Auxiliary Tank	15.0 gallons or 21.0 gallons
Left Auxiliary Tank	15.0 gallons or 21.0 gallons

c. Engine Oil (SAE 50 above 60°F, SAE 40 at 30° to 90°F, SAE 20 below 10°F ambient air temp. at sea level. Refer to Engine Manual for AD Oil grades.)

O-540:	12 qt. Maximum	IO-540:	8.0 qt. Maximum
	9 qt. Minimum		5.0 qt. Minimum

d. Brakes (Texaco Aircraft Hydraulic Oil 15, MIL-H-5606E or equiv.)

1 pint

SECTION II

GENERAL MAINTENANCE

CLEANING AND CARE OF AIRCRAFT

Keeping the performance, speed and durability that was built into your aircraft at the factory requires more than casual attention. The accumulation of dirt and oil on the outside and debris inside does affect these factors and can be a fire hazard as well. The first step to proper maintenance is a clean aircraft.

EXTERIOR

Frequent washing is good for your aircraft finish, especially during the first few months. Use any car soap or detergent with a soft cloth or sponge and plenty of clean water. Drying should be done with a chamois. Accumulation of oil, grease and exhaust carbon deposits should be removed frequently by using a soft cloth soaked in mineral spirits or other neutral cleaner.

For general polishing, apply a good quality car polish or wax according to instructions. Clean Plexiglas with plenty of soap and water using grit free soft cloth, chamois or sponge. Use of a dry cloth on Plexiglas will not only cause scratches but will also build up an electrostatic field which will attract dust to the surface. Blotting with a clean damp chamois will remove the charge and the dust. After cleaning, polishing with a good Plexiglas cleaning product such as "Mirror Glaz" will keep the glass clean and help polish out minor scratches.

Experience has shown that airplanes based at coastal airports or where there is an otherwise corrosive atmosphere require special treatment to prevent corrosion, specifically "electrolyte corrosion". Salt water and chemicals act as an electrolyte between dissimilar metals and can start a strong corrosive action over a short period of time. Maule makes every effort to separate dissimilar metals with primers and coatings during manufacture, but there are some locations (such as rivets in wing skins) where this is impossible. To combat corrosion it is important that the external painted surfaces be kept clean and well waxed. Wash the airplane with fresh water frequently to remove any salt or chemical film. Periodically, coat the wings, flaps and ailerons internally with a quality corrosion preventative, several of which are available. Floatplanes require more extensive preservation techniques, which are well known in the field.

INTERIOR

Floorboards should be vacuumed frequently and can be cleaned with any good rug cleaner.

Care should be taken in the disposal of candy wrappers, paper scraps, etc. These can work their way under the floorboards and become a fire hazard and moisture trap.

NOTE: While washing the aircraft, ascertain that all drain holes are open. Clean out any debris blocking them. Accumulated water can be dangerous, so check behind the baggage compartment frequently.

INTERIOR (Cont'd)

Textile upholstery may be cleaned using a vacuum cleaner. Grease and oil spots on the upholstery should be treated with a spot remover or dry cleaning fluid. Do not use soap and water on textile materials.

Vinyl upholstery may be cleaned using soft whisk broom or suds of any mild soap (castile or olive oil base) in lukewarm water. Use water sparingly as the upholstery otherwise requires a long time to dry if water trickles through the seam stitches.

For best results, stains, especially those caused by grease or paint, should be removed from upholstery as soon as possible or they may become "set"" and hard or impossible to remove. "Set" stains should be removed carefully with a clean cloth dampened in denatured alcohol. Stains caused by shoe polish can best be removed with turpentine. However, such cleaning agents are liable to affect the dust-repellent finish of the vinyl if used in excess of the actual requirements. Never use volatile solvents such as lacquer thinner, acetone, etc. on upholstery.

The cleaning should be completed by wiping the surface of the vinyl dry with a clean cloth, particularly in the seam. No attempt should be made to apply preservatives such as wax, polish, or varnishes, as these will not be absorbed by vinyl, but will merely collect dust. There are protective treatments made especially for vinyl, which are commercially available and quite satisfactory.

Leather upholstery should be cleaned by leather cleaning methods using leather-cleaning products.

INSPECTION GUIDES

At ***25 Hour Total Time,*** *perform* ***50 Hour*** *Inspection as described below:*

At ***50 Hour Total Time*** and every ***50 hours*** thereafter:

A. POWER PLANT

	MECH	INSP
1. Perform appropriate inspection as called for in the Textron Lycoming Operator's Manual, p/n 60297-9, Initial Revision or later.		
2. Perform appropriate inspection as called for in the Hartzell Owner's Manual and Logbook, p/n 7998-115N, Revision 14 or later or McCauley Owner's Manual, p/n MPC-11, Initial Revision or later.		
3. Remove the outer muffs from the mufflers and inspect the mufflers and tubes for cracks. Inspect muffs for cracks before reinstalling.		
4. Inspect gascolator, clean if necessary.		
5. Inspect engine controls for security and proper operation.		
6. Clean or replace air filter. (See page 31 for Brackett air filter)		
7. Inspect all engine, engine mount attach bolts.		
8. Inspect all engine fuel and oil lines for general condition and security.		
9. Check all engine compartment electrical connections and wires for security and chafing.		

B. AIRCRAFT

1. Check battery for general condition and electrolyte level, (in wet cell batteries only).		
2. Check all main electrical connections.		
3. Check fluid level in brake reservoirs.		
4. Check the entire fuselage, tail surfaces, and wings for cracks, security of fairings and general condition.		
CAUTION: If airplane is subject to excessive stress, i.e., heavy loads, adverse wind conditions, rough landings, etc., take special care in examining wing skins for any cracks. If any are found, repair before further flight in accordance with AC 43:13 and factory drawings. (Do not replace any countersunk rivets with buttonhead rivets in wing because it is not approved.)		
5. Check the aileron and flap skins for cracks.		
6. Check the security, operation, and general condition of all control surfaces.		
7. Drain sumps of fuel tanks.		

	MECH	INSP
8. Check general condition of Maule tailwheel, leaf springs and spring attachment. Leaf springs should have 45° angle with no weight on the wheel. Check all bolts and nuts holding the tail springs to the fuselage. Tighten nuts, if needed, so that there is no play or side movement in the springs or their attachment.		
9. Check tires for inflation and cuts.		

At ***100 Hours Total Time*** and ***every 100 Hours*** thereafter, perform the **50 hour** inspection plus the following:

A. POWER PLANT

1. Perform appropriate inspection as called for in the Textron Lycoming Operator's Manual, p/n 60297-9, Initial Revision or later.		
2. Perform appropriate inspection as called for in the Hartzell Owner's Manual and Logbook, p/n 7998-115N, Revision 14 or later or McCauley Owner's Manual, p/n MPC-11, Initial Revision or later.		
3. Clean the engine with any good engine cleaner (Gunk, etc.) Be sure to protect magneto from getting wet.		
4. Examine baffles and baffle extensions for security and cracking.		
5. Clean gascolator screen.		
6. Re-torque bolts attaching engine mount-to-fuselage, engine-to-engine mount. Visually inspect mount structure for condition. See "Engine Mount" under "Power Plant System".		
7. Inspect induction system and air box for cracks and security.		
CAUTION: For carbureted engine only: If rubber seal on air valve is in poor condition, replace seal with black nitrile rubber with cotton insert and/or if valve plate is loose, repair per SB#16. (Check compliance to Maule SB#16 if aircraft was manufactured before 3/96.)		

B. AIRCRAFT

1. Remove right and left kick panels in cockpit, windshield side post covers and panels below seat fronts. Examine rudder cables (located behind kick panels) and attaching clamps, bolts and nuts for security and general condition. CAUTION: If cable guide tubes are not installed and if backside of kick panel shows evidence of rudder cable rub and tape has not been placed, comply with Maule SB#14 and #17.		
2. Examine all front cockpit electrical connections and wires, fuel lines and fittings, control cable attachments and pulleys for security, leaks, chafing, etc.		
3. Remove rear seat, rear floorboard and panel behind baggage compartment.		

	MECH	INSP
4. Inspect all control cables, pulleys, fairings and electrical connections and wires for security and chafing.		
5. Open zippers in headliner and inspect all control cables, pulleys, fairleads and electrical connections and wires for security and chafing.		
6. Remove wing root fairings and inspect control cables, fairleads, fuel lines and connections, and electrical wires and connections for security, chafing, and leaks.		
CAUTION: If a wing has been removed and reinstalled, or a new wing installed, visually inspect the routing of aileron cables through the inspection hole cover located on underside of wing, aft of rear spar and outboard of wing strut attach brackets. Ascertain that cables are not over the strut attach bracket and that they are properly routed through the fairleads and around the pulleys		
7. Remove wing strut fairings, top and bottom, and inspect attaching fittings and bolts for security, corrosion, and cracks. Carefully inspect both sides of lift struts for abrasion, corrosion, pinholes, and punctures. Any paint loss or minor corrosion should be sanded down to bare metal with fine sandpaper and metal primer should be applied. After the primer is dried, a finish coat of the desired color may be added. Powder coating is recommended if complete strut is being refinished		
WARNING: Any unrepairable dents or punctures in strut are cause for replacement of the strut. NOTE: This aircraft was equipped with sealed struts when manufactured. (Sealed struts are identified by two weld spots located at upper end. Removal of the upper cuff is needed to locate the weld spots).		
If powder coating exterior of sealed strut assembly, remove plug from lower end before painting. Oilcoat internal walls of strut as follows (to be done after painting only): Inject into strut approximately one quart of Valoil or Lionoil Multi-purpose L-1, Linseed Oil, Paralketone, LPS-3, Randolph Tube Oil No. 315, Tubeseal (Lineoil) or any other preservative oil conforming to Federal Spec. TT-S-176D, Mil-C-82309E, Type II or Mil-C-6708, Type I. Reinstall plug and slosh oil until interior of strut is thoroughly coated. Remove plug and drain oil from strut. Reinstall plug. Optional: pressure test to 4 psi +/-1 for leaks using soap solution.		
8. Remove wheels and inspect wheels, tires, brake disc, bearings, brake lines and brake pad for wear, cuts, chafing, leaks and general condition. Repack wheel bearings		
9. Remove landing gear top fairings and inspect attaching fittings and bolts for security, corrosion, and cracks and inspect brake hose for security, chafing and leaks.		
10. Remove inspection hole cover in fuselage bottom inboard main landing gear (spring gear) attach points. Visually check bolt/nut attachment for security, both from below and above. Check fuselage square tube truss for cracks or bending. Carefully inspect both sides of the spring gear itself at the inboard attachment and along its entire length for abrasion, cracking, corrosion, exfoliation,		

mechanical damage, or any other adverse conditions. Remove any corrosion and prime and paint the affected area. Spray entire inboard area of spring gear, attachment points, and truss with LPS-3 Rust Inhibitor (LPS Laboratories, Inc.) or equivalent. The torque on the AN inboard attach bolts must be 240-300 inch pounds and on outboard clamp bolts 160-190 inch pounds. NOTE: Service Letter 74 that supersedes Service Letter 66, adds high strength NAS bolts and tension nuts as the preferred option for outboard and inboard at tach bolts for aluminum spring gears. These bolts require 450-500 inch lbs. torque on the inboard attach bolts and 160-190 on the outer attach bolts. These bolts listed on Service Letter 74 are factory installed on M-7-235C S/N 25118C and up, and affects S/N's 25001C to 25117C.		
	MECH	INSP
CAUTION: Use Steps 9 and 10, above as a guide for inspection after an unusually hard landing or any time there is concern about the condition of the main landing gears or their attachments.		
11. Remove all inspection covers/plates and inspect all visible control cables, pulleys, bellcranks, electrical wires and connections, fuel lines and fittings, nuts, bolts, etc. for security, chafing, leaks, etc.		
NOTE: Check top side of rear elevator horn and cable and bottom side of forward elevator horn and cable if yellow color-coding paint is visible. If missing, paint per Maule Service Bulletin No. 30.		
12. CAUTION: At inspection hole in tail, visually check the pivoting action at the control cable attachment points over the <u>full</u> range of rudder and elevator travel. This action should be such that there are no bending loads imparted to the turnbuckles (which are designed for straight tension load only).		
NOTE: Any binding which causes bending of the turnbuckles should be removed. Any cable attachment parts, which display appreciable corrosion, must be replaced before further flight.		
CAUTION - Before flight whenever elevator cables are reconnected or new cables installed: Always check operation of elevators after a cable reconnect by <u>pulling back</u> on the control wheel and ascertain that the elevators are in the <u>UP</u> position.		
NOTE: Pivot points must be cleaned and lubricated with any lightweight lubricating oil. Following lubrication, the cable attachments, including the turnbuckles, must be heavily coated with a good preservative such as: Black Bear Paralketone Preventative/Black Bear Co./Long Island City, NY. (preferred) LPS 3, Heavy Duty Rust Inhibitor/LPS Laboratories, Inc./Tucker, GA		
NOTE: Larger stainless steel turnbuckles and corrosion resistant steel fasteners for the elevator cables are approved and recommended for airplanes operating in a potentially corrosive environment.		

CAUTION: Special attention should be given to the horizontal stabilizer lower strut attach stub tubes which are welded to the lower longerons. The seal on the inside of the strut attach stub tubes can deteriorate with age which could cause corrosion on the interior of the attach stub tubes, especially on floatplane models. It is recommended that the stabilizer struts be removed to inspect attach stub tubes at each Annual. If there is visible external corrosion around the attach stub tubes, or the internal seal appears loose or cracked, remove the seal, clean the inside of the tube and visually inspect the inside for corrosion. (Note: earlier model Maule airplanes used a hard seal filler material, which may crack or lose adhesion with the tube. Later Models used silicone rubber as a seal, which is more compliant and durable.) If corrosion is found, repair in accordance with AC 43.13-1B. After repair, or if no corrosion is found, fill entire tube with silicone rubber to seal tube from moisture. Inspect the struts for dents, corrosion, or punctures and replace if necessary. Reinstall struts with new hardware and document in aircraft records.		
NOTE: Double struts, available through Maule, are recommended for floatplanes and banner and glider towing planes.		
	MECH	INSP
13. Lubricate all chains and points of rotation on sprockets, pulleys and bellcranks.		
14. Inspect and lubricate all control surface hinges and control horn connections.		
15. Lubricate door hinges and latches and seat tracks.		
CAUTION: Carefully inspect all door hinge bolts and nuts for condition and security. If using elastic nuts on door hinges, they must be replaced with castle nuts and cotter pins. Refer to Maule Service Letter No. 61.		
16. Lubricate rudder pedals and rudder bar points of rotation.		
17. Check control rigging and cable tensions.		
18. Check and clean vacuum system regulator valve filter and intake filter.		
19. Check the pitot static system for leaks.		
20. Inspect the following components of the ME406/406HM ELT:		
a. (ELT unit and mount) for proper installation and insecure mounting.		
b. Wiring and conduits – for improper routing, insecure mounting, and obvious defects.		
c. Bonding and shielding – for improper installation and poor condition.		
d. Antenna, including trailing antenna – for poor condition, insecure mounting, and improper operation.		
e. Verify the battery expiration date. See below for more information concerning ELT Battery.		
21. Ensure that the Airplane Flight Manual is at the current revision level by going online at mauleairinc.com and checking “downloads” on the home page.		
22. Ensure that all applicable Airworthiness Directives and Maule Service Letters and Bulletins that are mandatory have been complied with.		

Periodic Maintenance for ME406/406HM ELT for the US

In the United States, minimum maintenance requirements for ELTs are stated in FAR 91.207 paragraph (d):

(d) Each emergency locator transmitter required by paragraph (a) of this section must be inspected within 12 calendar months after the last inspection for

1) Proper installation
2) Battery corrosion
3) Operation of the controls and crash sensor
4) The presence of a sufficient signal radiated from its antenna

NOTE: All references to maintenance requirements for the United States shall also apply to all ELT users outside of the United States unless otherwise required by the installer/aircraft maintenance procedures or the relevant national regulations.

ELT manufacturer suggests testing of the ELT every 1 to 2 months. This provides an indication of the integrity of the ELT and antenna system. If performed at this rate, the accumulated operating time will not reduce the 5-year life rating of the battery pack.

ELT Battery removal:
CAUTION: The battery pack contains electrostatic sensitive parts. Take ESD precautions before handling. Damage may happen to the exposed electric parts and prevent correct operation of the ELT. Refer to ELT Description, Operation, Installation and Maintenance Manual p/n 570-1600, Rev. E or later, Para. 5.1 for methods of preventing an EletroStatic Discharge

1) Remove the 8 securing screws from the battery-side cover. Battery pack is identified by the embossed text: "BATTERY ACCESS ON THIS SIDE".

2) Carefully lift the battery cover (battery pack) away from the ELT and unplug the flex-cable connected to the pack. Do not pull on the flexible portion of the cable - use the rigid section of the flex circuit at the connector as a handle.

3) Inspect the battery pack and ELT chassis. The battery cells, components and connectors should be free of corrosion. Inspect flex-circuit for broken connections or damage. Ensure the battery housing is free of cracks or other visible damage.

4) Verify the battery expiration date. If the battery pack has not expired it may be reinstalled. The battery pack must be replaced with a new one:

   - After use in an emergency.
   - When the transmitter has been in use for more than 1 cumulative hour; (7 flash error)
   - After an inadvertent activation of unknown duration.
   - On or before the battery replacement (expiration) date.
   - There is any evidence of corrosion or leakage of any cell or on the small interface board and connector.

ELT Battery replacement:

1) If replacing the battery pack, order replacement kit 455-0012 which contains the battery pack (452-6499), replacement gasket, hardware and labels. A spare label showing the expiration date is included in the replacement kit. This label should be mounted in the same location as the former expiration date label.

2) Lay the battery pack on the work surface with the batteries facing up. Install a replacement seal in the slot along the perimeter of the housing. Leaving the battery as it is, position the ELT over the battery pack with one hand and plug the flex-cable connector into the battery assembly using the other. The cable should not be twisted and the connector should 'click' into place.

Note: The battery connector is keyed to prevent incorrect installation.

WEIGHING PROCEDURE

DETAILED CALCULATIONS OF EMPTY WEIGHT AND EMPTY WEIGHT CENTER OF GRAVITY:

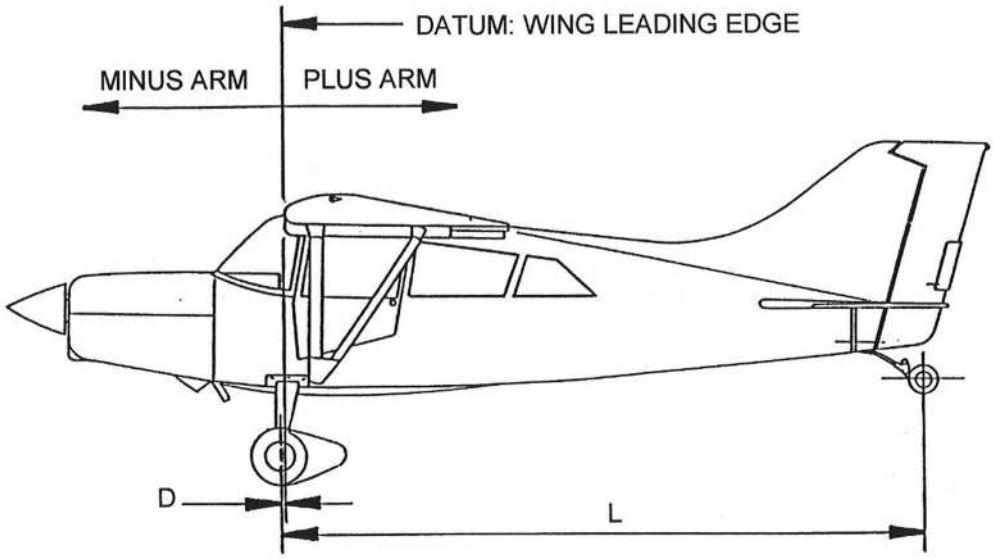

PROCEDURE:

1. Place each of the wheels on a scale with the tailwheel elevated to place the airplane in approximately the flight attitude.

2. Place a level on the leveling mark and leveling lug on the bottom of the right wing near the root. Adjust the height of the tailwheel until the aircraft is level.

3. Measure the following distances:

   a. Wheel base (**L**) - the horizontal distance from the tailwheel weight point (center of axle) to the main wheel weight point (center of axle).

      L = _____ Inches

   b. Main Wheel Station (**D**) - the horizontal distance from the main wheel weight point (center of axle) to the datum line.

      D = _____ Inches

4. Measure the weights at the following points:

   a. **Right** Main Wheel.....= _____ Lbs.

   b. **Left** Main Wheel.....= _____ Lbs.

   c. **Tailwheel,** with tare =_____Lbs., minus tare of _____ Lbs.

      = net Tailwheel wt. **(T)** of _____ Lbs.

      Total Weight as Weighed **(W) =** _____ Lbs.

   The above empty weight includes unusable fuel of ** lbs. at 24 inches and 12 quarts of oil at minus 34inches for the O-540 engine and 8 quarts of oil at minus 34 inches for the IO-540 engine, plus all items of equipment as marked on the accompanying Equipment Lists. The certificated empty weight is the above weight less 24 lbs. drainable oil for the O-540 engine or above weight less 16 lbs. drainable oil for the IO-540 engine at a minus

   arm of 34 inches and for this airplane is _____lbs. The corresponding empty

   weight center of gravity is _____inches.

5. Calculations for determining weight, C.G. and moment:

   a. Center of Gravity (inches) = $\frac{L \times T}{W}$ - D

      i.e., C.G. = _____ - _____ = _____inches.

   b. Moment (inch pounds) = **W** x C.G.

      i.e., Moment = _____ x _____ = _____inch lbs.

**Use 18 lbs. for “A” or “B” tank configurations and 27.6 lbs. for “C” or “D”.

RIGGING PROCEDURES

1. LEVELING:

Laterally: The airplane can be accurately leveled laterally using the front spar attach bolts. Turn these two bolts so that a flat on the head is "up". Fabricate two equal length spacers (1½ inch minimum length) which can be placed on the bolt heads. Place a 48 inch level across the two spacers and block under the landing gear to center the bubble.

Longitudinally: Using a level thirty six (36) inches long or longer, place it on the leveling lug and leveling mark thirty one (31) inches to the rear of the leveling lug on the bottom of the right wing root. Raise the tail to bring bubble to center.

2. DIHEDRAL ANGLE:

To check dihedral angle at the front spar, remove both top wing root fairings to expose the front spar attach bolts. Stretch a string along the top of the wing above the front spar, from wingtip to wingtip, and draw it tight. String can be attached to tie down fittings underneath the wing to hold tautness. Be careful to protect the edges of the wingtips from string chafing.

Find the row of flush rivets on the top of each wing from wingtip to wingtip at the front spar location. Measure from the forward wing to fuselage attach bolt centerline, for both left and right wings, outboard 127.5 inches along the top of each front wing spar. Using masking tape or equivalent, tape the string down on the rivet centerline at this point.

At the inboard end of the front spar, measure the distance from the top rear edge of the spar cap to the string for both wings. Adjust the front wing struts so as to have a measurement of 2 3/4 inches on each wing (plus or minus 1/8 inch) at this location. It is recommended that the rear struts be removed while adjusting dihedral. The wing must be supported while the front strut is being adjusted. For rear strut adjustment, see section on washout.

CAUTION: Be sure that the strut fork is not extended more than1 inch of threads from the strut end to the end of the fork threads (not including the jam nut). There must be at least 1 3/8 inch of thread engagement into the strut.

3. WASH OUT:

To adjust the wash-out in the wings, proceed as follows:

Put a leveling protractor chordwise on the underside of the wing root and adjust it to a zero degree reading. Now put the protractor chordwise just inboard of the wing tip and adjust the rear strut to give ½° trailing edge up, difference from the wing root angle.

4. TAIL ASSEMBLY:

With the airplane in level position, the stabilizers should be leveled at their rear spars. The hinge line should be straight from tip to tip. The vertical stabilizer should be plumb at the hinge.

5. AILERONS:

Adjust the ailerons to streamline position by placing a straight edge on the bottom of the wing chordwise at the inboard end of the aileron. Then adjust the turnbuckles in the aileron system so the control wheels are centered and there is a gap of zero to ¼ inch between the straight edge and the trailing edge of the aileron.

Check the aileron travel for 20° ±1° up and 20° ±1° down. Adjust turnbuckles to stay within these limits. Proper cable tension is 15 to 25 lbs.

6. FLAPS:

Adjust the first notch (0°) flap position to be aligned with the aileron trailing edge with the ailerons centered. Check the flap travel with flap handle at fully retracted (handle down) position for negative 7° ±1° up, and 24° ±3° down for second notch, 40° ±3° down for third notch and 48° ±3° down for fourth notch. Adjustment, if needed, may be accomplished by adjusting turnbuckles located above front seats through headliner. Proper cable tension is 60 lbs. ±10 lbs.

7. RUDDER:

Set-up for Installation of Rudder Cables:

Lock rudder to vertical stabilizer using a C-Clamp and two (2) padded wood blocks. Establish the rudder "Neutral Position" by measuring (and holding) a distance of 6" between the backside of the rudder pedal(s) to the face of the interior firewall. Note: Make sure the interior (firewall) insulation and (firewall) vinyl covering/upholstery is adequately compressed during this initial set-up phase. A wooden spacer of the appropriate length (a 2x4 wooden block works fine) is ideal to hold the given distance during the rudder-rigging process. Install rudder cables and related-hardware.

Check the rudder travel for 21° ±1° right and left. Rudder cable tension is controlled by springs, and the cables should not be slack with the rudder centered. Rudder trim may be accomplished by adjusting the tension of the rudder centering springs located behind the rear bulkhead. Keep springs as short as possible but never less than 4 ½ inches from end coil to end coil with the rudder centered.

8. ELEVATORS:

Elevator control movements are up 30° ±1°, down 20° ±1°. Stops are located on the vertical tail rear spar just inside the inspection plate. Proper cable tension is 25 to 45 lbs.

CAUTION - BEFORE FLIGHT whenever elevator cables are reconnected or new cables installed: Always check operation of elevators after a cable reconnect by pulling back on the control wheel and ascertain that the elevators are in the UP position.

9. ELEVATOR TRIM:

Elevator trim tab movement is 12° ± 2° up, 38° ± 2° down. If adjustment is needed, it may be done at the turnbuckles located just aft of the trim control. Proper cable tension is 15 to 25 lbs.

10. RUDDER TAB:

This tab is interconnected with the aileron system to automatically coordinate aileron and rudder controls for simplified handling in the air. (It may be used as a rudder trim tab to make the airplane trim in cruise.) This tab may be adjusted by changing to the position of the tab cables where they attach to the aileron cables located just over the front doors on the inside of the airplane. Normally, the tab should be streamlined with the rudder when the aileron and rudder controls are centered.

The tab travel is 48° ±4° right or left. Proper cable tension is 5 to 10 lbs.

CAUTION: Make sure tab is free at extreme aileron travel.

NOTE: The "Rudder Trim Control" on the instrument panel pulls on a spring attached to the right rudder pedal. It is not connected to the tab on the rudder.

LUBRICATION

1. Main wheel bearings - Use aircraft quality bearing grease.

2. Hydraulic brake reservoirs - Use Texaco Aircraft Hydraulic Oil 15 conforming to MIL-H-5606E, or equivalent.

3. Control Column - Apply light coat of graphite base lubricant to aileron balance chain, torque tube and control guide. Use lightweight motor oil or LPS #2* on all other bearings.

4. Use lightweight motor oil or LPS 2*:
   - Control pulley bearings and control surface hinges
   - Flap bellcrank and mechanism
   - Aileron and flap hinge
   - Elevator and trim tab -
5. Tailwheel - Good quality wheel bearing grease to tailwheel bearings through zerk fitting. Same for fork spindle roller bearings, if necessary. See tailwheel maintenance section under "Landing Gear, Wheels and Brakes".

*LPS 3 recommended for airplanes operating in a potentially corrosive environment.

FABRIC REPAIRS:

(Applicable to Polyurethane paint on Ceconite fabric only)

REPAIRS:

1. Small holes and damaged areas can easily be repaired without removing the existing paint topcoat.

2. Trim the damaged area to a rectangular or circular shape.

3. Lightly scuff sand with #320 or #400 wet/dry sandpaper approximately 2 inches around the repair area.

4. Mix one part gray urethane primer (catalyst) with two (2) parts gray urethane primer (2:1 ratio - 2 parts paint/1 part catalyst), mixing a very small amount only for coating the sanded area around the repair.

5. Apply one coat (this may be brushed) to the sanded area slightly larger than the size of the patch to be applied. This application aids in total adhesion to the topcoat and offers a fresh chemical adhesion base for the repair patch.

6. Allow prime to dry for 4 hours.

7. Apply a coat of urethane adhesive (thinned one to one (1:1) with urethane adhesive thinner by volume) to the primed area slightly larger than the repair patch size. Allow this to dry for approximately 15 minutes.

8. Apply a second coat of the thinned urethane adhesive and lay the patch in the wet bed of adhesive, smoothing the edges while applying a topcoat of the thinned urethane adhesive, working he edges down. Allow to dry at least 8 hours prior to any shrinkage.

SHRINKING THE REPAIR AREA:

When using an iron to shrink the patch, always use a piece of aluminum foil over the area to be tautened and the surrounding undamaged topcoat. This is to prevent any scorching of the topcoat. Follow the procedure previously mentioned (primer and finish coat application). Take care to feather sand as required during primer procedure to feather the repair patch and blend in prior to topcoat spraying.

SPECIAL PRECAUTIONS:

For any repair or damaged area larger than 16 inches in any direction, refer to FAA AC 43.13 1B. Only use equal or next heavier weight fabric for repair patch. Do not substitute any other products or brands in this procedure

SECTION III

MAJOR COMPONENT PARTS

WINGS:

The complete wing is of metal construction (2024-T3 aluminum) with a fiberglass wing tip.

Spar root end strut fittings are made of 2024-T4 aluminum.

LIFT STRUTS:

The lift struts are sealed, streamlined tubes attached to the wing and fuselage by means of AN standard steel bolts. When inspecting the struts, check for nicks and dents and see that all bolts are snug (not tight).

In handling the airplane on the ground, care should be taken to prevent damage to the lift struts by pushing or lifting in the middle of the strut. Frequent inspection of the struts should be made and any paint loss or minor corrosion should be sanded down to bare metal with fine sand-paper and metal primer should be applied. After the primer is dried, a finish coat of the desired color may be added.

WARNING: Any unrepairable dents or punctures are cause for replacement of the strut.

FUSELAGE:

The fuselage is a welded truss type structure having an integral vertical tail fin. Chrome molybdenum steel (4130) is used for all tube members, control fittings, floor supports and seat members. Doorframes and other nonstructural parts are made of cold rolled steel (1008 to 1015) or stainless steel (per customer's request).

If it becomes necessary to replace any fuselage members, sleeve type splices should be made in accordance with practices outlined in FAA AC 43.13-1, Aircraft Inspection and Repair.

The forward fuselage section is aluminum covered (5052-H34 or 2024-T3). The firewall and bottom fuselage just aft of the cooling air egress are made of .018 galvanized sheet steel.

The aft fuselage section is covered with Ceconite fabric and standard dope and paint finish as per Maule Specification S-17. Later models are finished with polyurethane or acrylic urethane paint in accordance with Maule Specifications S-40 or S-41, respectively. This fabric need not be pulled or punch tested.

MOVABLE SURFACES AND CONTROL

AILERONS AND FLAPS:

The ailerons and flaps are aluminum alloy structures covered with 2024-T3.

The aileron control system consists of a chain drive connecting the two control wheels and is attached to the necessary cables which are routed over pulleys through the fuselage and into the wing section to the aileron horns.

The flap control system consists of a control lever which has five active positions, (-7°, 0°, 24°, 40° and 48°). This is connected to the control cables (and spring cartridge located directly behind cargo area) which are routed over pulleys through fuselage and connected to chain drive located directly above the cabin area. This chain drive is connected to a torque tube which operates the flap through a push-pull rod attached to the inboard hinge fittings.

ELEVATORS:

The elevator has a chrome molybdenum (4130) internal structure covered with Ceconite fabric. Inspect for corrosion. Drain grommets should be kept open. The hinge attachments should be lubricated with light engine oil. Accumulations of dust and dirt on hinges should be removed.

STABILIZERS:

The stabilizers have chrome molybdenum steel (4130) internal structures covered with Ceconite fabric. Inspect for corrosion including elevator hinges and struts.

RUDDER:

The rudder structure is very similar to the elevators. No maintenance other than inspection for corrosion is needed. The hinges should be cleaned and lubricated with light engine oil at frequent intervals. The cable attachment points should be checked for wear and corrosion.

TRIM AND RUDDER TABS:

These surfaces have low carbon steel frames with aluminum alloy skin (2024-T3).

These surfaces need no maintenance other than inspection for corrosion. The hinges should be lubricated at frequent intervals using light engine oil.

LANDING GEAR, WHEELS AND BRAKES

MAIN LANDING GEAR:

The main landing gear consists of separate left and right side heat-treated (7075-T651) aluminum spring legs, which are bolted to a square tube truss in the bottom of the fuselage structure. No maintenance is required. However, since the landing loads are taken on these members, they are stressed and should be inspected frequently for damage and corrosion. See Section II, "Inspection Guides".

MAIN WHEELS AND BRAKES:

See Equipment Lists for items installed and options.

To change a tire, follow these steps:

1. Chock opposite main wheel and tailwheel.

2. Raise wheel with a light scissors jack or a small bottle jack placed under the lower end of the spring gear leg.

3. Remove brake calipers by removing two (2) brake bolts.

4. Raise wheel using a hoist with a cable sling placed under the lower end of the spring gear leg as shown on page 24.

5. Remove hubcap, cotter pin, and retainer nut.

6. Remove wheel.

7. Deflate tire by removing valve core.

WARNING: Failure to fully deflate the tire prior to separating the wheel halves (Step 8) may result in personal injury.

8. Break tire bead on both rim halves.

9. Remove wheel rim through-bolts.

10. Clean rims thoroughly.

11. Remove bearings and check for scoring, galling and corrosion. Replace as required.

12. Re-grease and assemble. (Tire and wheel rims are prebalanced. Balance points are usually marked by a colored dot.)

13. Lightly inflate to prevent pinching of tube when tightening through-bolts. Torque to 150 ±10 in.-lb.

Remove brake calipers

Place hoist cable
sling under gear
leg and lift

14. Reinstall wheel. Install axle nut and torque as follows: Rotate wheel-tire while tightening axle nut to 150-200 in.-lb. to seat the bearing. Back off axle nut to zero torque. Tighten axle nut to 30-40 in.-lb. while rotating wheel-tire. Rotate axle nut (CW or CCW) to align nearest axle nut hole with axle slot. Insert axle nut retainer spring fully into axle slot and ensure engagement with holes in axle nut.

15. Inflate tire to 35 psi to seat tire on rims and back off to 27-34 psi normal pressure. (16-18 psi for oversize tires.)

16. Thoroughly inspect landing gear and axle; check that axle attach bolts are torqued to 90 in.-lb. (dry).

17. Inspect brake pads. Replace if necessary.

18. Reinstall brake calipers and hubcap.

BRAKE CYLINDERS:

The hydraulic brakes are actuated by two (2) master cylinders, Maule P/N 4046B, on the left side, and two (2) slave cylinders on the right side.

Check hydraulic oil level in master brake cylinders, proper level is no closer than ¼ inch to top of cylinder. Add oil, if needed.

Bleeding brake system may be done as follows:

1. Fill reservoir if necessary.

2. Replace plug in reservoir.

3. Connect a clear plastic tube to the bleeder valve with the free end of the tube in a container of hydraulic brake fluid.

4. Actuate brake pedal full stroke with the bleeder valve open which will force fluid into the receptacle where a check can be made for escaping air bubbles. Continue to actuate pedal until no more air bubbles are observed.

5. When no bubbles are observed, close the bleeder valve after pedal has returned to “off” position. Remove the plastic tube.

6. Recheck reservoir level and fill as necessary.

MAINTENANCE HINTS ON HYDRAULIC BRAKES:

Excessive pedal travel:

Probable cause	Corrective Action
1. Normal wear of brake pad at wheel	1. If pad is worn thin, replace with new pad.

2.	Leak in system	2.	Inspect all attachments and fittings in brake system.
3.	Air in system	3.	A springy, rubber action of the pedal indicates air in the system. An excessive amount of air in system will allow the pedal to continue traveling under normal pressure. In either case, the system should be filled and bled.
4.	Lack of fluid in reservoir	4.	Air will enter system if the reservoir runs dry. Inspect at regular intervals and keep reservoir full at all times.
5.	Vent plug stopped up	5.	If vent hole in reservoir plug becomes stopped, there is a possibility that a partial vacuum will be created in the system which will interrupt the fluid flow in the system. Clear vent hole.
6.	Improper bleeding – air mixed with fluid	6.	Bleed brakes.
7.	Master cylinder cup or “O” ring wear	7.	Replace brake cylinder cups and “O” rings.
8.	Wheel cylinder leakage	8.	Replace wheel cylinder seals.

DRAGGING BRAKES:

NOTE: These disc brakes have no spring return of the pads and thus will always drag slightly. Do not be concerned unless this drag is noticeable while taxiing.

	Probable Cause		Corrective Action
1.	Foreign matter in system	1.	If dirt is found in the system, the master cylinder and brake assemblies must be dismantled and parts cleaned with alcohol and reinstalled. Flush system and install new brake fluid.
2.	Binding of brake piston	2.	Dust or dirt mixing with brake fluid at the brake may become gummy and cause sticking of the brake piston. Remove parts and clean and fill system with new fluid. become gummy and cause sticking of the brake piston. Remove parts and clean and fill system with new fluid.
3.	Use of improper fluid	3.	Improper fluid may destroy the seal and packings. Use only the recommended hydraulic fluid.

MAULE SFS-P8B TAILWHEEL

The Maule SFS-P8B is a Full Swivel Steerable Tailwheel. See Fig. 1 for detailed breakdown. If shimmy of the tailwheel becomes a problem, it should be lubricated and adjusted as follows:

A. DISASSEMBLY

1. Remove cap (74B) - may be pried off with flat side of a screwdriver.

2. Hold the fork (69B) and loosen the nut (A1).

3. With the nut removed, carefully remove the fork spindle from the rest of the assembly. Slowly rotate the fork back and forth while withdrawing it and collect the loose parts.

4. Clean all of the metal parts in solvent. Inspect all parts and replace any parts that exhibit excessive wear.

B. SHIM SELECTION

1. Position the bearings (A5) in bracket (71B) and slide the fork (69B) through the bearings. Do not install any of the other parts at this time.

2. Slide lock ring (73B) over the threaded end of the fork spindle and run nut (A1) down until it bottoms on the lock ring.

3. Tighten the nut moderately and note whether or not there is any end play in the bearings. If there is no endplay and no excessive rotational drag, shimming will not be required. If there is any bearing endplay, remove the nut and spindle and install one (1) shim (83B) on the spindle and repeat the check. Normally only one (1) or two (2) shims will be required to remove any bearing clearance. Too many shims will cause the bearings to drag when the nut is tightened.

C. ASSEMBLY

1. Grease pack roller bearings (A5) and lock pin (13AB) with wheel bearing grease. Grease the parts adjacent to lock pin. Do Not grease friction washer (72B-4) or the parts adjacent to it.

2. Place the roller bearings (A5) in their races, the felt seals (78B-2) on the bearings, and the three (3) springs (76B) in the three deeper holes in bracket (71B). Place friction ring assembly (72B-3) over the springs with the pin in the shallow hole in bracket (71B). Grease may be used to hold the foregoing parts in place. Do Not allow any grease on the friction washer surface of the friction ring assembly (72B-3).

3. Place shim(s) (83B) on lower shoulder of the spindle on fork (69B). Place the friction washer (72B-4) on the large diameter friction surface of the fork.

4. Carefully slide the fork spindle through the friction ring and bearings until the friction washer is bottomed against the springs. Make sure that all parts stay in place.

5. Assemble lock ring (73B), arm (6) (with lock pin (13AB) and spring (14) installed), shield (36), and pins (60AB) together as a unit. Make sure that the key end of lock pin 13AB) is properly aligned with the slot in lock ring (73B).

6. Slide the lock pin subassembly over the threaded end of the fork spindle being careful to keep the parts together. It will be necessary to retract lock pin (13AB) slightly to clear wear plate (75B) as the assemblies are brought together.

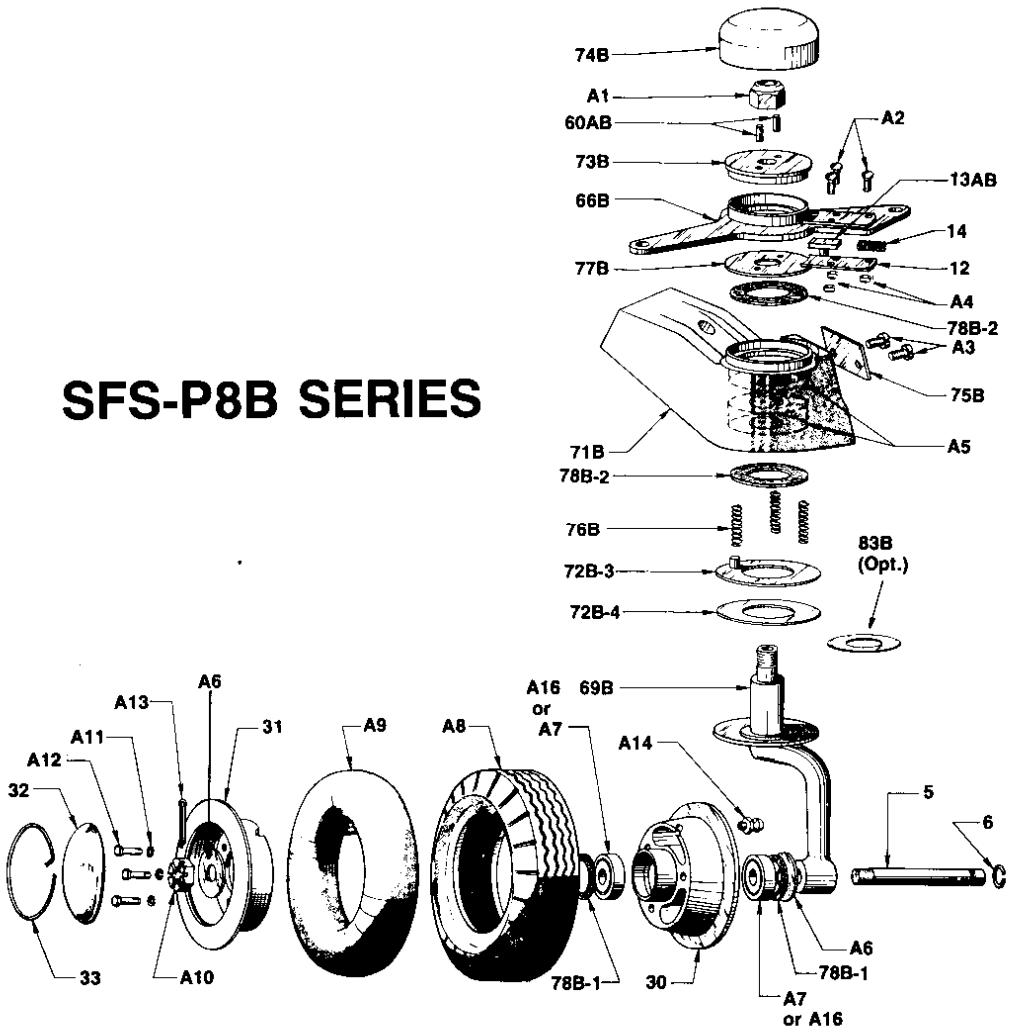

FIGURE 1

7. Thread on nut (A1) and torque to 15-20 foot pounds. Fork should rotate by hand, but with some drag, which is normal and caused by the friction washer.

8. Install cap (74B) with soft mallet. Check wheel rotation. There must be no play in the bearings. Wheel should rotate with a slight drag.

D. TAILWHEEL INSTALLATION

1. Check all bolts and nuts holding the tail springs to the fuselage. They must be tight so that there is no play or side movement in the springs or their attachment.

2. Tighten the bracket bolt and back off enough to install the cotter pin. There must be no looseness or play between the bracket (71B) and the spring.

3. Install the connector springs, using the **heavier spring on the right side.** Install the springs so that the light spring is compressed approximately 1/2 to 3/4 inch.

4. Inflate the tire to approximately 20 psi. Higher pressure may be used if the wheel has no tendency to shimmy.

POWER PLANT SYSTEM

The power plant system consists of the engine, engine mount, propeller, cowl, engine controls, exhaust, air intake system and fuel system.

ENGINE:

Engine instructions covering the care and operation are covered in the engine manufacturer's Operator's Manual.

PROPELLER:

The propeller manufacturer's Installation, Operation and Service manual contains information on the proper use and care of the propeller.

ENGINE MOUNT:

The engine mount is a welded structure of chrome molybdenum steel (4130) tubing. The engine is attached to the mount by means of four point suspension to four (4) mounting pads on the engine case. Each leg attachment incorporates a shock mount designed to absorb torsional fluctuation and vibrations of the engine. The engine mount assembly is bolted at the firewall to the fuselage structure by means of four (4) 3/8" attaching bolts, (requiring a torque of 13.3-15.8 ft. lbs.) which should be checked for tightness periodically.

An extremely close visual inspection of the engine mount should be made to periodically check for cracks, dents, weld failures, etc., of the mount tubular members as well as the general condition of the mount. At regular intervals, the attaching bolts at the engine should be checked for tightness (required torque value of 37.5-41.5 ft. lb.) The rubber engine mounts should be carefully inspected and replaced if necessary at each 100-hour inspection. Excessive engine vibration at various RPM ranges should also prompt their inspection. Care should be exercised to prevent the rubber mount's contact with oil as this may result in their premature deterioration. When torquing any engine or mount bolts, precaution should be taken against any over-tightening, as this also may cause early failure.

COWLING AND BAFFLING:

The cowling consists of an upper and lower section. Removal is accomplished by unlocking the dzus fasteners and removing the AN526 screws.

A periodic inspection of the cowling should be made checking for cracks, chafing, security of attachment, etc.

Baffling should be checked for security and the rubber sealing extensions should be checked for wear and security. When the cowl is installed, these sealing extensions should lay up, forward or inboard, and provide a good seal against the cowl.

BRACKETT AIR FILTER: (See below for other air filter)

Service by: 1. Replacement of element when:
- a) Every 12 months regardless of hours used,
- b) or, every 100 hours use,
- c) or, when operating in extremely dusty conditions, change frequently; use your good judgment.

Special instructions for new element: Squeeze out all excess wettant in element prior to installation. And DO NOT WASH OUT wettant as this will destroy some of the filter's efficiency. Be sure safety pin is in place after installing.

AIR FILTER: (other than Brackett)

Visually inspect at each periodic maintenance. Follow cleaning instructions as printed on air filter. Clean periodically as determined by environmental conditions encountered. Replace when cleaning no longer services unit.

EXHAUST SYSTEM:

Remove Heater Shells, check mufflers and tailpipes for cracks. Check attachments for security. Note that the tailpipe clamps and the muffler-to header attachments should not be tightened to the point of rigidity, but should be loose enough to be moved easily by hand.

Check the heater shell retaining screws for security and ensure that hot air hoses are clamped tightly and are not worn or chafed.

FUEL SYSTEM

Two (2), 23.8 gallon (or 21.5-gallon) main fuel tanks, mounted in the inboard end of the wings, have front and rear outlets. The fuel lines running from these tanks terminate at the fuel selector valve on the left side kick panel. The fuel selector valve has four positions: LEFT, RIGHT, BOTH and OFF. The fuel then runs through the firewall to the fuel gascolator. Fuel runs from the gascolator to the electric fuel boost pump, to the engine driven fuel pump, and then to the carburetor. Leave selector valve on LEFT or RIGHT position when airplane is parked to prevent fuel transfer from one side to the other.

If installed, two (2) auxiliary wing tip fuel tanks, fifteen (15) gallon (or twenty-one (21) gallon) capacity, are mounted in the second from the outboard wing bay. They are fuel transfer tanks and simply supply fuel to the main tank through a small vibrator pump.

The fuel line should be checked for cracks and chafing every 100 hours or annually and the gascolator should be cleaned at the same time. The auxiliary tank transfer pump strainers should be cleaned at the same interval. This is done by removing the pump bottom with a 5/8" wrench. The pump is on the rear spar, inboard of the auxiliary tank, and the bottom is exposed.

ELECTRICAL SYSTEM

The electrical system is a 14 or 28 volt, 50 amp, direct current, single wire circuit using the airplane structure as a ground return to the battery. All wiring in the airplane is fabricated into harnesses which are groups of related wires tied together. Most of the harnesses originate at circuit breakers on the main bus (center of instrument panel) and terminate at the load (light, pump motor, etc.) Wiring diagrams are shown at the end of this manual.

CAUTION: Addition(s) of electrical equipment must not cause the total load to exceed 50 amperes. The total rated alternator capacity is a nominal 63 amperes at cruise rpm. Paragraph 4-26(d) of FAA AC 43.13-1A limits the total continuous load to 80% of the total rated capacity, or 50 amperes. A 50 amp circuit breaker is installed in aircraft.

BATTERY:

A lead plate type storage battery rated at 12 or 24 volts is installed in the battery frame assembly behind rear cabin bulkhead. The battery supplies current for the airplane electrical system when the master switch is in the “ON” position only. A heavy-duty battery solenoid switch is installed next to the battery and is controlled from the Instrument panel by the battery switch.

The battery is the sealed type with the base being integrally vented. Tubes attached to the case vent the battery to the fuselage bottom. Battery caps should be kept tight to prevent electrolyte spillage. If spillage does occur, the affected area should be cleaned with a liberal application of an acid neutralizing solution such as baking soda and water.

This battery is considered fully charged at a hydrometer specific gravity reading of 1.265. A low charge would be 1.225 or lower. Operating with a low charge will shorten the life of the battery and can be prevented by recharging or operating with the electrical equipment turned off until the battery has been sufficiently recharged.

ALTERNATOR AND ALTERNATOR CONTROL SYSTEM

To protect the alternator and battery from an overcharge, the voltage regulator should be checked for a charging voltage of 13.7 to a maximum of 14.0 volts with the engine at rpm of 1000 or above.

Overvoltage protection is incorporated into the alternator control unit which will latch off regulator output after an overvoltage event. Reset of latch off caused by either over voltage or shorted output is accomplished by momentary turn off of supply voltage, i.e., push ALT switch OFF then ON.

Battery charging is monitored by reference to the ammeter located in the instrument panel on the right side of the engine instrument cluster. Should the ammeter indicate a minus deflection when engine is above 1000 rpm and/or red “ALTERNATOR OFF WARNING” light is illuminated, push ALT the switch OFF then ON. Repeat two times as necessary to reset. If system will not reset, investigate electrical malfunction as operation will be on the battery only.

Electrical Schematic (14V) *(For s/n 25001C-25044C)* The wire numbering system has been designed to ease tracing a faulty wire. The circuit tracing code is as shown below in the schematic. Wires are plainly labeled near each end.

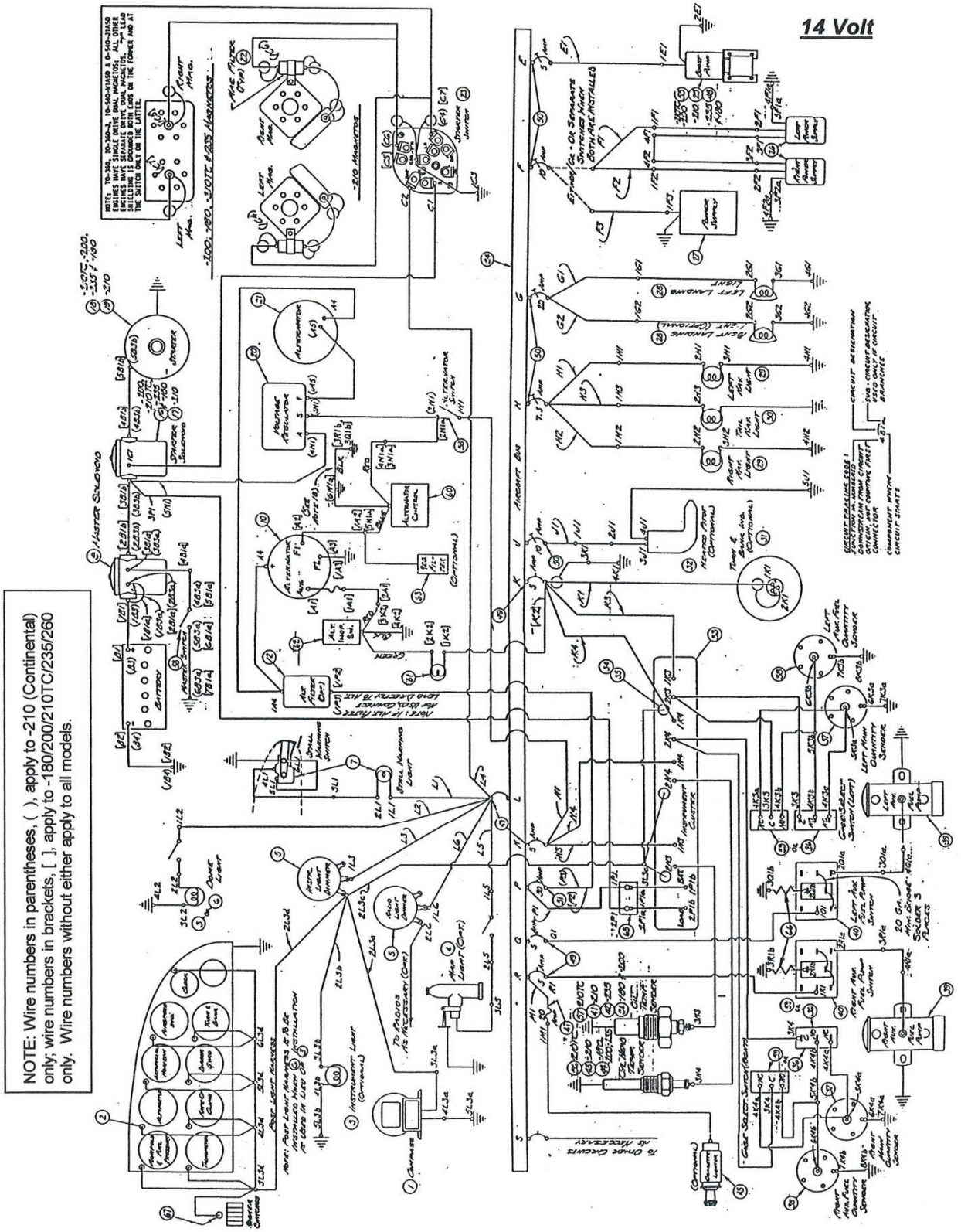

Electrical Schematic (14V) *(For s/n 25044C & up)* The wire numbering system has been designed to ease tracing a faulty wire. The circuit tracing code is as shown below in the schematic. Wires are plainly labeled near each end.

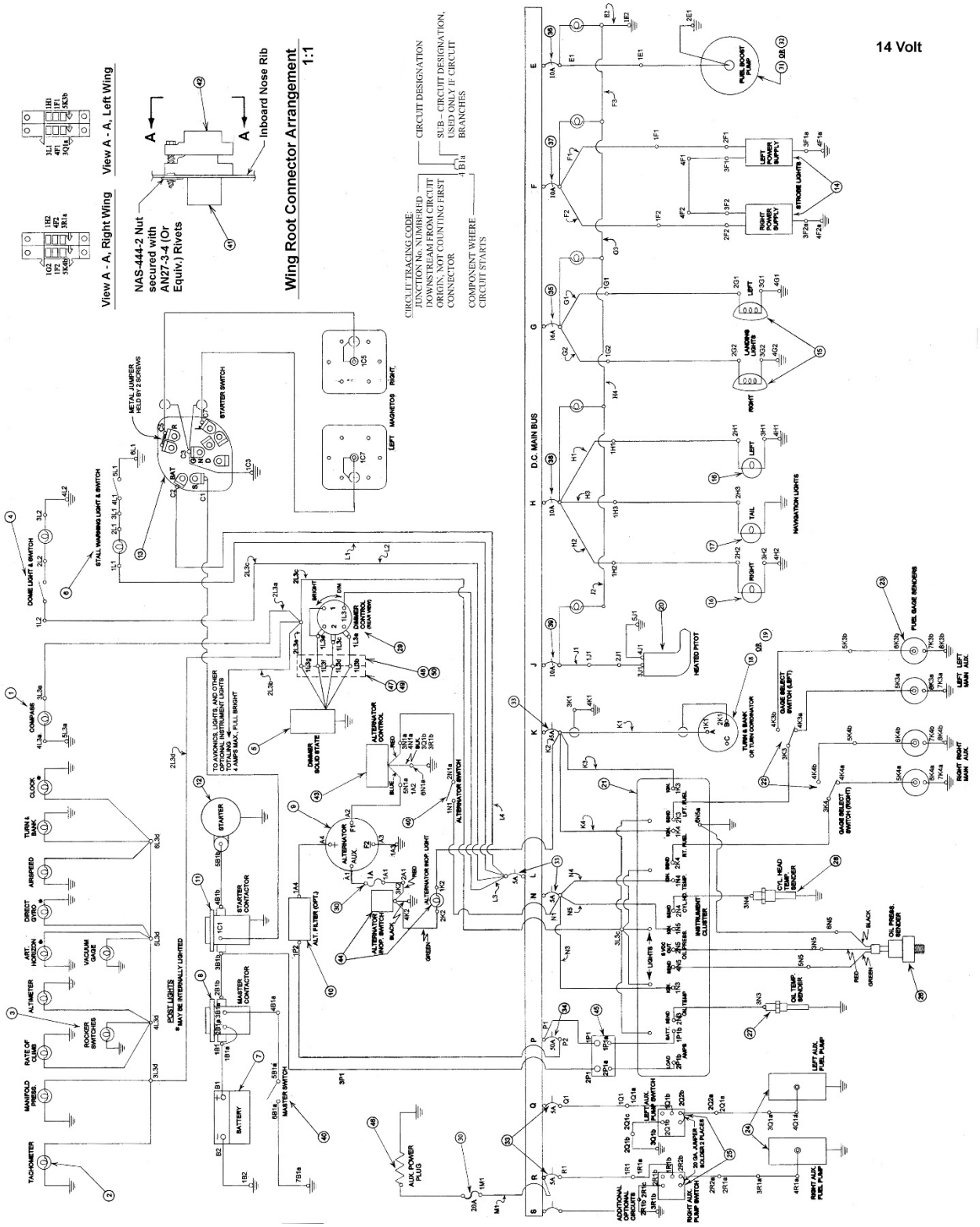

Electrical Schematic (28 Volt) The wire numbering system has been designed to ease tracing a faulty wire. The circuit tracing code is as shown below in the schematic. Wires are plainly labeled near each end.

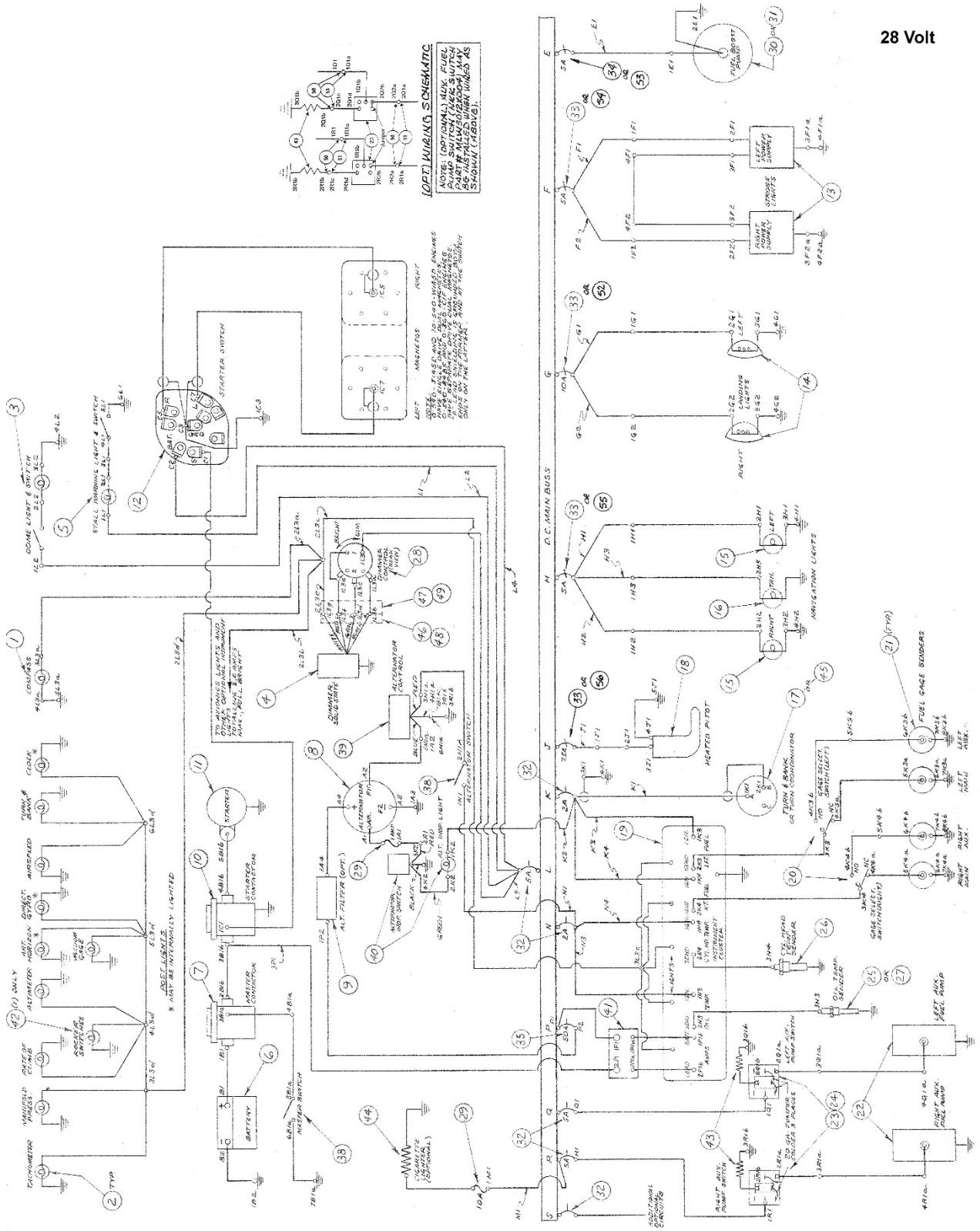

Old Style Door Latch Assembly (New improved Door Latch Assemblies are now available and are being installed in present production. Order Part No. 1395X for new improved Door Latch Assembly)

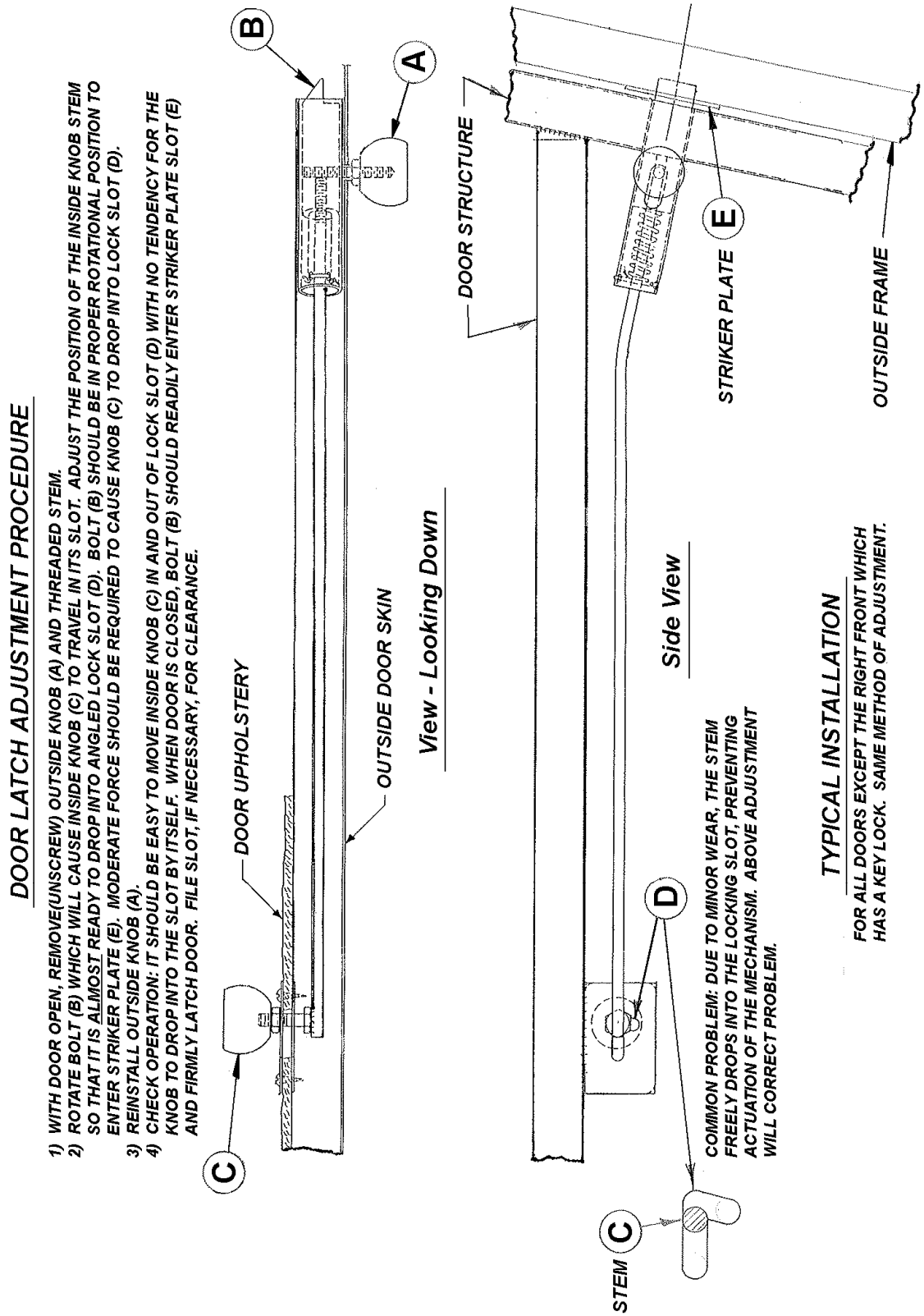

Airworthiness Limitations Section

The airframe does not have mandatory life limits or overhaul requirements. See Textron Lycoming Operator's Manual, p/n 60297-9, Initial Revision or later and the Hartzell Owner's Manual and Logbook, p/n 7998-115N, Revision 14 or later or McCauley Owner's Manual, p/n MPC-11, Initial Revision or later for the constant speed prop for their airworthiness limitations.